PAEB&LDWS EOL Calibration

V1.2

Copyright 2021 © Knorr-Bremse AG. All rights reserved, including industrial property rights applications.
Knorr-Bremse AG retains any power of disposal, such as for copying and transferring

Contents

0. Revision History 4
1. Scope 4
2. Related Document 4
3. Description 4
3.1 Sensor installation 4
3.2 SPTAC and calibration workflow 5
3.3 Calibration workflow details 5
3.3.1 Vehicle calibration values 6
3.3.2 SPTAC calibration target 7
3.3.3 Close Target 8
3.3.4 Far Target 8
3.3.5 Target position tolerances 9
3.4 Process conditions 9
3.5 SPTAC and calibration UDS commands details 10
3.5.1 SPTAC CLOSE commands 10
3.5.2 SPTAC FAR commands 10
3.5.3 Write Vehicle calibration values 10
3.5.4 Reset ECU 11
3.5.5 SPTAC Verification 11
3.5.6 Clear DTCs 11
4. Appendix 11
4.1 UDS commands required for SPTAC 11
4.1.1 Routine control 11
4.1.2 ReadDataByIdentifier 11
4.1.3 WriteDataByIdentifier 11
4.2 SPTAC and calibration Routines and DIDs 12
4.2.1 RID $ FE01 – SPTAC Calibration 12
4.2.2 DID $ FD10 - Vehicle calibration 19
4.2.3 DID $ FD11 - Base Camera Calibration (SPTAC) 22
4.2.3.1 Description 22
5. Description 24
5.1 Sensor installation 24
5.2 DC workflow 24
5.3 Calibration workflow details 24
5.3.1 Vehicle Calibration values 25
5.4 Process conditions 26
5.5 DC UDS commands details 26
5.5.1 DC commands 26
5.5.2 Write Vehicle calibration values 26
5.5.3 Reset ECU 27

Copyright 2021 © Knorr-Bremse AG. All rights reserved, including industrial property rights applications.
Knorr-Bremse AG retains any power of disposal, such as for copying and transferring

5.5.4 DC Verification 27
i. Clear DTCs 27
6 Appendix 27
6.1 UDS commands required for DC 27
6.1.1 Routine control 27
6.1.2 ReadDataByIdentifier 27
6.1.3 WriteDataByIdentifier 27
6.2 DC Routines and DIDs 28
6.2.1 RID $ FE02 – DC 28
6.2.2 DID $ FD10 - Vehicle calibration 33
6.2.3 DID $ FD11 - Base Camera Calibration 36
6.2.3.1 Description 36

Copyright 2021 © Knorr-Bremse AG. All rights reserved, including industrial property rights applications.
Knorr-Bremse AG retains any power of disposal, such as for copying and transferring

0. Revision History

Date	Version	Modification	Notes
2021.01.07	V1.0	Initial Version	Written by: ZhouDingduo Revised by: Liwenfeng, HuangZhi
2021.02.07	V1.1	Add light and background requirement when calibration in section 3.5	Written by: Li Wenfeng Revised by: Wang xin
2021.07.01	V1.2	Merge 06 PAEB LDWS Dynamic Calibration V1.0(2021.01.07)	Cai Jun

1. Scope

This document gives instructions about the end of line handling and calibration. For details about the required diagnostic commands see [2].

2. Related Document

See following documents for further information.

[1] UDS Specification

[2] DID Specification

3. Description

For proper camera calibration, Vehicle Calibration data shall be written to the ECU and then SPTAC (Single Pole Target Auto Calibration) shall be executed. The Vehicle Calibration is fix parameter that provide the mounting position of the camera in relation to the vehicle reference points. The SPTAC process uses the camera to capture two different images of a known target. This is used to calculate the camera height, pitch and yaw angle automatically.

3.1 Sensor installation

Copyright 2021 © Knorr-Bremse AG. All rights reserved, including industrial property rights applications.
Knorr-Bremse AG retains any power of disposal, such as for copying and transferring

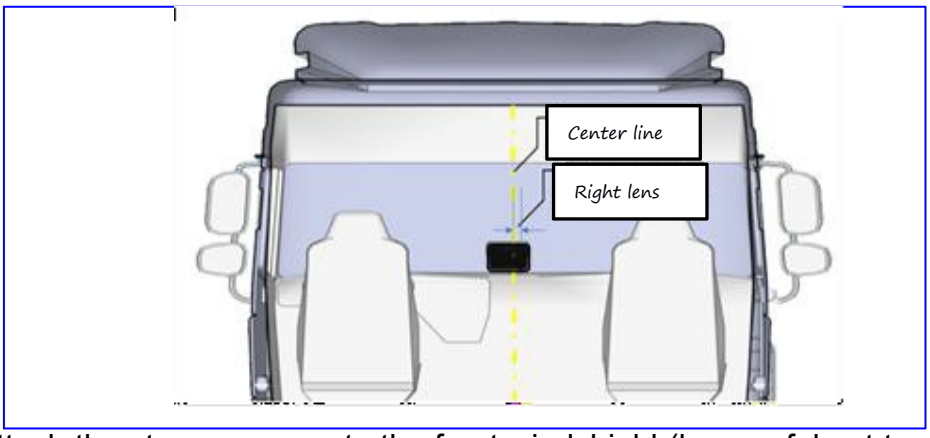

Attach the stereo camera to the front windshield (be careful not to stain 3M glue, leave no fingerprints or dust) while ensuring:

- The right lens of the camera is within 10cm of the center line
- Make 3M glue stick to glass firmly
- To keep Camera horizontal to the vehicle

3.2 SPTAC and calibration workflow

Execute SPTAC (Single Pole Target Auto Calibration) according to the workflow shown in Figure 1.Before executing the next step makes sure that the previous step is successfully finished. If SPTAC calibration fails readjust target pole, power cycle the camera and restart the SPTAC process. For details see the following sections.

3.3 Calibration workflow details

Copyright 2021 © Knorr-Bremse AG. All rights reserved, including industrial property rights applications.
Knorr-Bremse AG retains any power of disposal, such as for copying and transferring

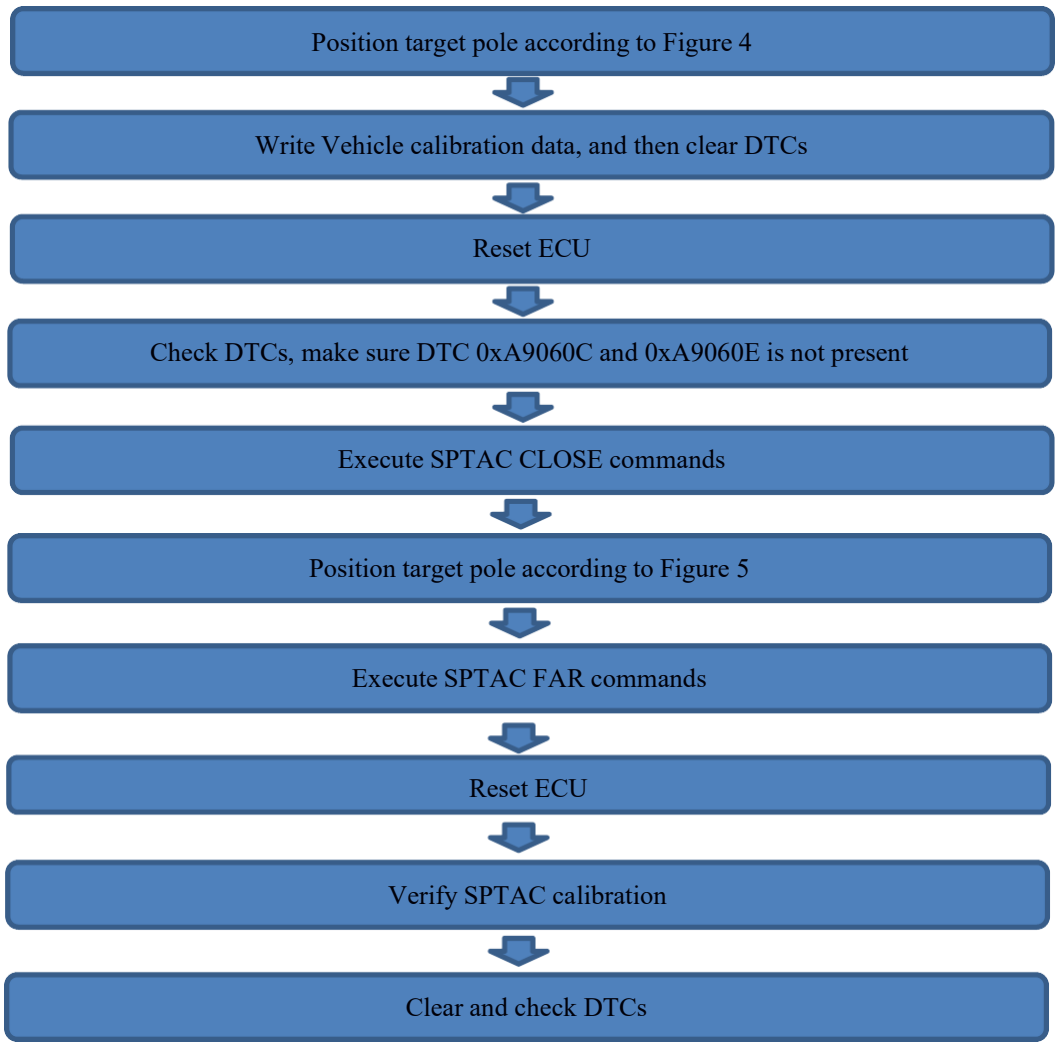

FIGURE 1 – WORKFLOW OF CALIBRATION

3.3.1 Vehicle calibration values

Mounting position parameters are required to be written to the camera.

Copyright 2021 © Knorr-Bremse AG. All rights reserved, including industrial property rights applications.
Knorr-Bremse AG retains any power of disposal, such as for copying and transferring

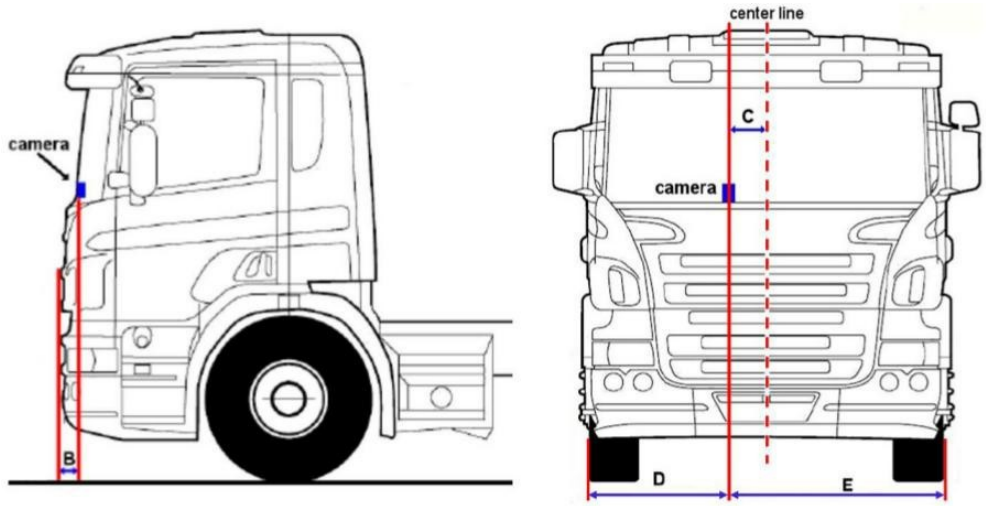

FIGURE 2 - DESCRIPTION OF MOUNTING POSITION PARAMETERS

- E = Left Wheel calibration value for vehicle
- D = Right Wheel calibration value for vehicle
- B = Camera Distance To Head value for vehicle
- C = Camera Lateral value for vehicle referred to the center of the vehicle
- Positive offset is right of vehicle center (looking forward through windshield)

3.3.2 SPTAC calibration target

A standardized SPATC (Single Pole Target Auto Calibration) target must be used for the calibration process of the camera. The target dimensions must be according to the description in Figure 3.

Copyright 2021 © Knorr-Bremse AG. All rights reserved, including industrial property rights applications.
Knorr-Bremse AG retains any power of disposal, such as for copying and transferring

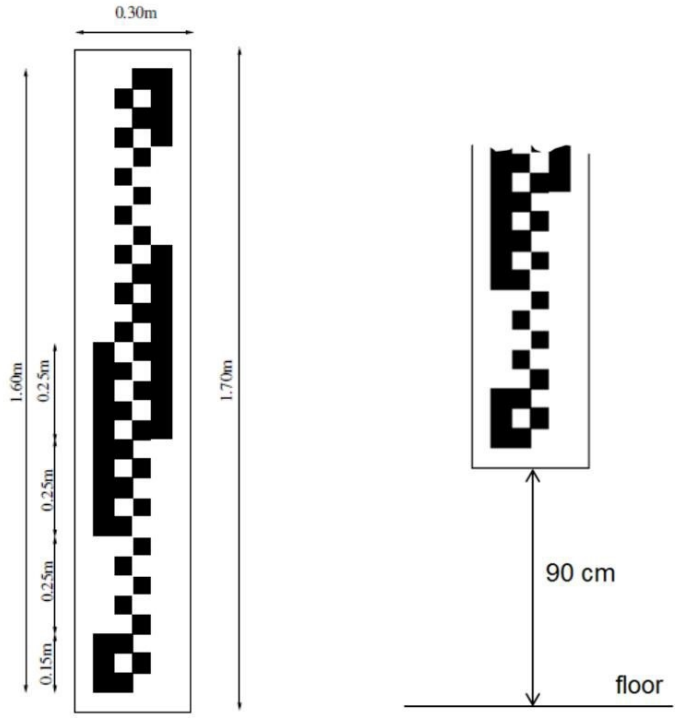

FIGURE 3 – DIMENSIONS OF SPTAC CALIBRATION TARGET

3.3.3 Close Target

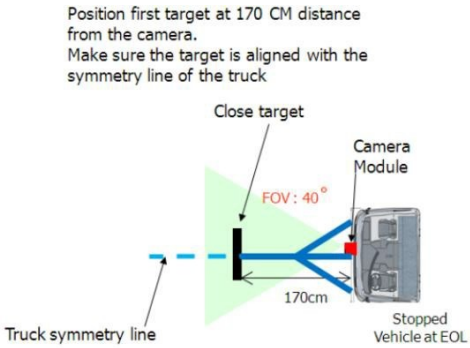

FIGURE 4 - POSITION OF CLOSE TARGET

Make sure that the bottom of the patterned board is exactly 90 cm above thefloor (see Figure 4).

3.3.4 Far Target

Copyright 2021 © Knorr-Bremse AG. All rights reserved, including industrial property rights applications.
Knorr-Bremse AG retains any power of disposal, such as for copying and transferring

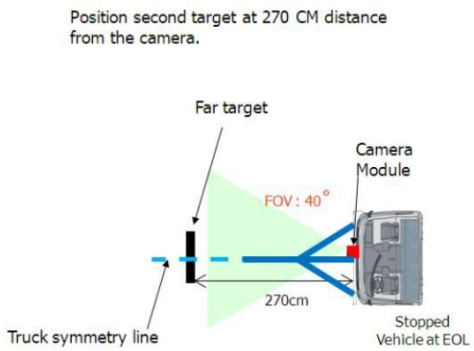

FIGURE 5 - POSITION OF FAR TARGET

Make sure that the bottom of the patterned board is exactly 90 cm above thefloor (see Figure 5).

3.3.5 Target position tolerances

Close target distance: 170 +/- 5 cm from camera Far target distance 270 +/- 5 cm from camera Lateral position +/- 3 cm from truck symmetry lineTarget height: 90 +/- 1 cm

Target out of plane rotation around the vertical axes: +/- 10 degrees Target out of plane rotation around the horizontal axes: +/- 5 degrees

3.4 Process conditions

To avoid sensor recalibration due to failed SPTAC, following details need to be considered:

- Ensure that the windshield in front of the camera isn't covered with anything (tape, dirt, markings, etc...). Windshield heating wires are ok.
- Ensure that there is no condensed water between camera and the inner side of the wind-shield.
- Ensure that the sight between single pole target and camera is not obstructed while doing SPTAC.
- Ensure that the camera is clipped into the bracket properly.
- Ensure that no one touches the camera lens while assembling.
- Single point target and the truck shall stand on the same plane surface.
- Ensure that the roll angle between single point target (which is perpendicular to plane surface) and the camera does not exceed +/-1.5 degrees.
- Ensure that the single pole target is illuminated to run SPTAC properly.
- Ensure there is no object interference(especially no striped pictures) around calibration plate; background behind the chart board is kept clean and empty; camera would not calibrate at backlight scene(no high-light in front of cameras); and light (recommend brightness at 300 lux to 3000 lux is better) is evenly distributed around chart board and stereo camera.

Copyright 2021 © Knorr-Bremse AG. All rights reserved, including industrial property rights applications.
Knorr-Bremse AG retains any power of disposal, such as for copying and transferring

Y417067: EN, English: 001: DDE1: Working:Li_Qingbiao: 2021/07/05-09:55:29

3.5 SPTAC and calibration UDS commands details

Use the UDS commands below for SPTAC calibration via CAN0 - J1939 vehicle CAN. Extended session with security access is required for the calibration process. The camera shall not be powered off during this process. UDS data bytes are formatted high byte through low byte order (e.g. a 16 bit value of '4321' Hex is written in order high byte 43 then low byte 21. A 32 bit value of 87654321 hex is 87 65 43 21).

3.5.1 SPTAC CLOSE commands

Command	UDS command HEX	Expected Result for success
SPTAC Start Routine close	31 01 FE 01 00	71 01 FE 01
SPTAC Request Routine Results close	31 03 FE 01 00	71 03 FE 01 01 FF FF
SPTAC Stop Routine close	31 02 FE 01 00	71 02 FE 01

3.5.2 SPTAC FAR commands

Command	UDS command HEX	Expected Result for success
SPTAC Start Routine far	31 01 FE 01 01	71 01 FE 01
SPTAC Request Routine Results far	31 03 FE 01 01	71 03 FE 01 01 00 00
SPTAC Stop Routine far	31 02 FE 01 01	71 02 FE 01

3.5.3 Write Vehicle calibration values

Use UDS service "WriteDataByIdentifier" for writing vehicle calibration values

Command	UDS command HEX	Expected Result for success
Vehicle calibration	2E FD 10 EE EE DD DD BB BB CC CC nn nn nn nn yy ss	6E FD 10

EE EE	Left Wheel calibration value for vehicle
DD DD	Right Wheel calibration value for vehicle
BB BB	Reference Point X
CC CC	Reference Point Y
nn nn nn nn	ChasisNumber
yy	CountryCode
ss	Status

Copyright 2021 © Knorr-Bremse AG. All rights reserved, including industrial property rights applications.
Knorr-Bremse AG retains any power of disposal, such as for copying and transferring

Y417067: EN, English: 001: DDE1: Working:Li_Qingbiao: 2021/07/05-09:55:29

3.5.4 Reset ECU

Command	UDS command HEX	Expected Result for success
ECUReset	11 01	51 01

3.5.5 SPTAC Verification

Command	UDS command HEX	Expected Result for success
SPTAC Calibration Read Base Camera	22 FD 11	62 FD 11xxxxxxxxxxxxxxxx AA

Read Base Camera Calibration responds with 0xAA in byte 13 for indicating successful SPTAC calibration

3.5.6 Clear DTCs

Clear Error memory.
Read Error memory. Make sure error storage is empty.

Command	UDS command HEX	Expected Result for success
Clear all DTC's	14 FF FF FF	54
Wait 10s for DTC's to be detected		
Read all DTC's	19 02 FF	59 02 89

4. Appendix

4.1 UDS commands required for SPTAC

4.1.1 Routine control

The UDS routine control command is used for executing SPTAC.For details about Routine Control service SID 0x31 see [1].

4.1.2 ReadDataByIdentifier

The UDS service ReadDataByIdentifier SID 0x22 is used for verifying SPTAC result.For details about ReadDataByIdentifier SID 0x22 see [1].

4.1.3 WriteDataByIdentifier

Copyright 2021 © Knorr-Bremse AG. All rights reserved, including industrial property rights applications.
Knorr-Bremse AG retains any power of disposal, such as for copying and transferring

Y417067: EN, English: 001: DDE1: Working:Li_Qingbiao: 2021/07/05-09:55:29

The UDS service WriteDataByIdentifier SID 0x2E is used for writing vehicle calibration data. For details about WriteDataByIdentifier SID 0x2E see [1].

4.2 SPTAC and calibration Routines and DIDs

4.2.1 RID $ FE01 – SPTAC Calibration

4.2.1.1 Description

Service $31 $FE01 allows the diagnostic tool to request the Server to perform a Service Calibration SPTAC.

4.2.1.2 Security

Service $31 $FE01 requires security access.

4.2.1.3 Application

Service $31 $FE01 is supported by the Application in the extended diagnostic session.

4.2.1.4 Boot

Service $31 $FE01 is not supported by the Boot.

4.2.1.5 Response Timing

Service $31 $FE01 performs the requested actions described and provide the response data in the positive response message within P2CAN_SERVER seconds after receiving the request.

4.2.1.6 Negative responses

Service $31 $FE01 supports the following negative response codes:

Negative Response Code $7F - service not supported in active session is provided if the required diagnostic session is not active.

Negative Response Code $13 - incorrect message length or invalid format is provided if the byte length of the requested message is not correct.

Negative Response Code $12 - sub function not supported is provided if the requested sub function is not supported.

Negative Response Code $31 - request out of range is provided if the server does not supported the requested routine Identifier or the user optional routine Control Option Record contains invalid data for the requested routine identifier

Negative Response Code $7E – Sub function not supported in active session

Copyright 2021 © Knorr-Bremse AG. All rights reserved, including industrial property rights applications.
Knorr-Bremse AG retains any power of disposal, such as for copying and transferring

Y417067: EN, English: 001: DDE1: Working:Li_Qingbiao: 2021/07/05-09:55:29

isprovided if the required diagnostic session is not active.

Negative Response Code $33 - security access denied is provided if the requiredsecurity level is not satisfied.

Negative Response Code $24 - request sequence error is provided in the followingcases.

a. SPTAC Close target 'requestRoutineResults' sub-function is received withoutreceiving

SPTAC Close target 'start Routine' for the requested routineIdentifier.

b. SPTAC Close target 'stopRoutine' sub-function is received without receiving SPTAC Close target 'requestRoutineResults' for the requested routineIdentifier.

c. SPTAC Far target 'start Routine' routine Control Option is received without receiving SPTAC Close target 'stop Routine' routine Control Option for the requestedroutineIdentifier.

d. SPTAC Far target 'requestRoutineResults' sub-function is received without receiving SPTAC Far target 'start Routine' for the requested routineIdentifier.

e. SPTAC Far target 'stopRoutine' sub-function is received without receiving SPTAC Far target 'requestRoutineResults' for the requested routineIdentifier.

Negative Response Code $22 - conditions not correct is provided if the SPTAC Close Routine is failed and SPTAC Far target 'start Routine' request is received

4.2.1.7 Request Response Format

Service $31 $FE01 supports the request / response format shown in the table below.

4.2.1.8 Request message for Start Routine

Data Byte	Parameter Name	Cvt	Hex Value	Mnemonic
#1d	RoutineControl request Service ID	M	#31h	RC
#2d	Sub-function = [Start Routine]	M	#01h	LEV_RCTP
#3d #4d	routineIdentifier [] = [Service Calibration SPTAC #1 Service Calibration SPTAC #2	M M	#FE #01	RI_ B1 B2

Copyright 2021 © Knorr-Bremse AG. All rights reserved, including industrial property rights applications.
Knorr-Bremse AG retains any power of disposal, such as for copying and transferring

Y417067: EN, English: 001: DDE1: Working:Li_Qingbiao: 2021/07/05-09:55:29

	]			
#5d	routineControlOptionRecord [] = [Close Far]	M	00h 01h	

4.2.1.9 Positive response message for start routine

Data	Parameter Name	Cvt	Hex Value	Mnemonic

Copyright 2021 © Knorr-Bremse AG. All rights reserved, including industrial property rights applications.
Knorr-Bremse AG retains any power of disposal, such as for copying and transferring

Byte				
#1d	RoutineControl request Service ID	M	#71h	RCPR
#2d	Start Routine	M	#01h	RCTP_
#3d #4d	routineIdentifier [] = [Service Calibration SPTAC #1 Service Calibration SPTAC #2]	M M	#FE #01	RI_ B1 B2

4.2.1.10 Request message for Stop Routine

Data Byte	Parameter Name	Cvt	Hex Value	Mnemonic
#1d	RoutineControl request Service ID	M	#31h	RC
#2d	Sub-function = [Stop Routine]	M	#02h	LEV_ RCTP_
#3d #4d	routineIdentifier [] = [Service Calibration SPTAC #1 Service Calibration SPTAC #2]	M M	#FE #01	RI_ B1 B2
#5d	routineControlOptionRecord [] = [Close Far]	M	00h 01h	

4.2.1.11 Positive response message for Stop Routine

Data Byte	Parameter Name	Cvt	Hex Value	Mnemonic
#1d	RoutineControl request Service ID	M	#71h	RCPR
#2d	Stop Routine	M	#02h	RCTP_
#3d #4d	routineIdentifier [] = [Service Calibration SPTAC #1 Service Calibration SPTAC #2]	M M	#FE #01	RI_ B1 B2

4.2.1.12 Request message for Request Routine Results

Copyright 2021 © Knorr-Bremse AG. All rights reserved, including industrial property rights applications.
Knorr-Bremse AG retains any power of disposal, such as for copying and transferring

Y417067: EN, English: 001: DDE1: Working:Li_Qingbiao: 2021/07/05-09:55:29

Data Byte	Parameter Name	Cvt	Hex Value	Mnemonic
#1d	RoutineControl request Service ID	M	#31h	RC
#2d	Sub-function = [Request Routine]	M	#03h	LEV_ RCTP
#3d #4d	routineIdentifier [] = [Service Calibration SPTAC #1 Service Calibration SPTAC #2]	M M	#FE #01	RI_ B1 B2
#5d	routineControlOptionRecord [] = [Close Far]	M	00h 01h	

4.2.1.13 Positive response message for Request Routine Results

Data Byte	Parameter Name	Cvt	Hex Value	Mnemonic
#1d	RoutineControl request Service ID	M	#71h	RCPR
#2d	Request Routine	M	#03h	LEV_ RCTP _
#3d #4d	routineIdentifier [] = [Service Calibration SPTAC #1 Service Calibration SPTAC #2]	M M	#FE #01	RI_ B1 B2
#5d #6d #7d	routineStatusRecord [] = [Pass - 01/Fail - 02 Reason for Fail : [0x00- NO_SPTAC_ERROR 0x01- UNKOWN_SPTAC_ERROR 0x02- SWITCH_CLOSE_FAR_SPTAC_ERROR 0x03- SAME_CLOSE_FAR_SPTAC_ERROR 0x04- LINE_MISMATCH_SPTAC_ERROR 0x05- FAR_CLOSE_ROLL_SPTAC_ERROR 0x06- LINE_NOT_FOUND_SPTAC_ERROR 0x07- BAD_IMAGE_SPTAC_ERROR 0x08- WRONG_STAGE_ERROR 0x09- ROLL_OUT_OF_RANGE 0x0A- FOE_OUT_OF_RANGE	U U	#XXh #XXXXh	RSR_ RS_ RS_

Copyright 2021 © Knorr-Bremse AG. All rights reserved, including industrial property rights applications.
Knorr-Bremse AG retains any power of disposal, such as for copying and transferring

Y417067: EN, English: 001: DDE1: Working:Li_Qingbiao: 2021/07/05-09:55:29

	0x1000- BRAIN_QUERY_UNAVAILABLE 0x1001- QUERY_DSTRUCT_UNAVAILABLE 0x1004- WRONG_STAGE_INIT 0x1005- WRONG_STAGE_CLOSE_TARGET_COMPLETE 0x1006- WRONG_STAGE_FAR_TARGET_COMPLETE 0x1007- WRONG_STAGE_RESULTS_READY 0x0D- ERROR_CAMERA_WRONG_STATE 0x0F- WRITE_TO_NVM_FAILURE 0x10- IPCUART FAILURE 0x13- PARAMS_READ_FAIL 0x14- CAL_PARAMS_OUT_OF_RANGE 0xFFFF-Close calibration successful]			

Ignore “Reason for Fail” in case of

Pass.NO_SPTAC_ERROR:

Reports when calibration process is

pass.UNKOWN_SPTAC_ERROR :

Reported when unknown error encountered while

processing.SWITCH_CLOSE_FAR_SPTAC_ERROR:

Reported when 'Far' target has been processed before 'close'

target.SAME_CLOSE_FAR_SPTAC_ERROR:

Reported when targets "Close" and "Far" have been placed in the same distance fromthe camera or too close to each other (less than 0.5m difference).

LINE_MISMATCH_SPTAC_ERROR:
Reported when there is no correlation between the 'close' position to the 'far' position(too far horizontally, so yaw could not be calculated.

FAR_CLOSE_ROLL_SPTAC_ERROR:

Reported when Roll Angle measured from 'close' target is too different from the onemeasured from'far' target.

LINE_NOT_FOUND_SPTAC_ERROR:

Reported when no target found.

BAD_IMAGE_SPTAC_ERROR:

Copyright 2021 © Knorr-Bremse AG. All rights reserved, including industrial property rights applications.
Knorr-Bremse AG retains any power of disposal, such as for copying and transferring

Reported when there are at least 3 lines that are filled

with '0'.WRONG_STAGE_ERROR:

Reported when wrong command sequence (Sequence must be: Init, Close, Far,Results. For wrong sequence this error is reported).

ROLL_OUT_OF_RANGE:

Reported when SPTAC has finished calculation, but Roll Angle is out-of-

range.FOE_OUT_OF_RANGE:

Reported when SPTAC has finished calculation, but Yaw or Horizon is out-of-

range.BRAIN_QUERY_UNAVAILABLE:

Reported when query to brain is

unavailable.

QUERY_DSTRUCT_UNAVAILABLE:

Reported when query to brain request is

unavailable.WRONG_STAGE_INIT:

Reproted when calibration process init is in a wrong

stage.

WRONG_STAGE_CLOSE_TARGET_COMPLETE:

Reported when close target calibration process is finished

incompletely.WRONG_STAGE_FAR_TARGET_COMPLETE

Reported when far target calibration process is finished incompletely.

WRONG_STAGE_RESULTS_READY:

Reported when calibration results are at wrong

stage.ERROR_CAMERA_WRONG_STATE:

Reported when calibration process moves to the wrong state and not in a desired state.
WRITE_TO_NVM_FAILURE:

This is reported when SPC calibration process is complete without any errors andCalibration write to MCU NVM fails.

IPCUART_FAILURE:

This is reported when SPC calibration process request messages times out or

Copyright 2021 © Knorr-Bremse AG. All rights reserved, including industrial property rights applications.
Knorr-Bremse AG retains any power of disposal, such as for copying and transferring

Y417067: EN, English: 001: DDE1: Working:Li_Qingbiao: 2021/07/05-09:55:29

receivesinvalid data for the requests from the camera.

PARAMS_READ_FAIL:

Reported when calibration results read

fails.CAL_PARAMS_OUT_OF_RANGE:

This is reported when SPC calibration process is complete but MCU internal calibration validation proved to be out of range.

4.2.1.14 Negative response message

Data Byte	Parameter Name	Cvt	Hex Value	Mnemonic
#1d	negativeResponse Service Id	M	#7Fh	NR
#2d	RoutineControl request Service ID	M	#31h	RC
#3d	responseCode	M	#XXh	RC

4.2.2 DID $ FD10 - Vehicle calibration

4.2.2.1 Description

Write “calibration values for vehicle” to NVM.
This value is only valid after ECU reset.

4.2.2.2 Security

Service $22 $FD10 does not require security access.Service $2E $FD10 does not require security access.

4.2.2.3 Application

Service $22 $FD10 is supported by the Application in default, and extended diagnostic sessions.

Service $2E $FD10 is supported by the Application in extended diagnostic session.

4.2.2.4 Boot

Service $22 $FD10 is not supported by the Boot.

4.2.2.5 Response Timing

Service $22 $FD10 performs the requested actions described and provide the response data in the positive response message within P2CAN_SERVER

Copyright 2021 © Knorr-Bremse AG. All rights reserved, including industrial property rights applications.
Knorr-Bremse AG retains any power of disposal, such as for copying and transferring

Y417067: EN, English: 001: DDE1: Working:Li_Qingbiao: 2021/07/05-09:55:29

seconds after receiving the request.

4.2.2.6 Negative responses

Service $22 $FD10 supports the following negative response codes:

Negative Response Code $13 - incorrect message length or invalid format is provided if the byte length of the requested message is not correct.

Negative Response Code $31 - request out of range is provided if the data identifier is not supported or if the data identifier is requested in boot.

4.2.2.7 Read Request Response Format

Service $22 $FD10 supports the request / response format shown in the table below.

4.2.2.8 Request message

Data Byte	Parameter Name	Cvt	Hex Value	Mnemonic
#1d	ReadDataByIdentifier Request Service ID	M	#22h	RDBI
#2-3d	Vehicle calibration Data Identifier	M	#FD10h	BCC

4.2.2.9 Positive response message

Byte	Description Text	Unit	Hex Range Phy. Range	Conversion
#1d	ReadDataByIdentifier Request Service ID	Bit	None	0x62
#2-3d	Vehicle calibration Data Identifier	Bit	None	0xFD10
#4-5d	Left Wheel calibration value for vehicle	cm	20-200	Unsigned 1 cm / bit
#6-7d	Right Wheel calibration value for vehicle	cm	20-200	Unsigned 1 cm / bit
#8-9d	Distance To Head	cm	0-255	Unsigned 1 cm / bit
#10-11d	Lateral to Center Line	cm	-100-100	Signed 1 cm / bit
#12-15d	ChasisNumber		0-4294967296	
#16d	CountryCode			1 = China
#17d	Status			0x55 = Not Programmed 0xAA = Programmed 0xFF = Invalid

Copyright 2021 © Knorr-Bremse AG. All rights reserved, including industrial property rights applications.
Knorr-Bremse AG retains any power of disposal, such as for copying and transferring

Y417067: EN, English: 001: DDE1: Working:Li_Qingbiao: 2021/07/05-09:55:29

4.2.2.10 Negative response message

Data Byte	Parameter Name	Cvt	Hex Value	Mnemonic
#1d	negativeResponse Service Id	M	#7Fh	NR
#2d	ReadDataByIdentifier Request Service ID	M	#22h	RDBI
#3d	Negative responseCode	M	#XXh	NRC

4.2.2.11 Write Request Response Format

Service $2E $FD10 supports the request / response format shown in the table below.

4.2.2.12 Request message

Data Byte	Parameter Name	Cvt	Hex Value	Mnemonic
#1d	ReadDataByIdentifier Request Service ID	M	#2Eh	WRBI
#2-3d	Vehicle calibration Data Identifier	M	#FD10h	BCC
#4-5d	Left Wheel calibration value for vehicle	cm	20-200	NRC
#6-7d	Right Wheel calibration value for vehicle	cm	20-200	Unsigned 1 cm / bit
#8-9d	Distance To Head	cm	0-255	Unsigned 1 cm / bit
#10-11d	Lateral to Center Line	cm	-100-100	Unsigned 1 cm / bit
#12-15d	ChasisNumber		0-4294967296	Signed 1 cm / bit
#16d	CountryCode			1 = China
#17d	Status			0x55 = Not Programmed 0xAA = Programmed 0xFF = Invalid

4.2.2.13 Positive response message

Byte	Description Text	Unit	Hex Range Phy. Range	Conversion
#1d	ReadDataByIdentifier Request Service ID	Bit	None	0x6E
#2-3d	Vehicle calibration Data Identifier	Bit	None	0xFD10

4.2.2.14 Negative response message

Copyright 2021 © Knorr-Bremse AG. All rights reserved, including industrial property rights applications.
Knorr-Bremse AG retains any power of disposal, such as for copying and transferring

Y417067: EN, English: 001: DDE1: Working:Li_Qingbiao: 2021/07/05-09:55:29

Data Byte	Parameter Name	Cvt	Hex Value	Mnemonic
#1d	negativeResponse Service Id	M	#7Fh	NR
#2d	ReadDataByIdentifier Request Service ID	M	#2Eh	WRBI
#3d	Negative responseCode	cm	#XXh	NRC

4.2.3 DID $ FD11 - Base Camera Calibration (SPTAC)

4.2.3.1 Description

Upon Requesting Service $22 $FD11 ECU returns the Base Camera Calibration(SPTAC).

This is a Calibration stored in NVM from SPTAC process which will be run atcamera Service and Factory EOL.

4.2.3.2 Security

Service $22 $FD11 does not require security access.

4.2.3.3 Application

Service $22 $FD11 is supported by the Application in default, and extendeddiagnostic sessions.

4.2.3.4 Boot

Service $22 $FD11 is not supported by the Boot.

4.2.3.5 Response Timing

Service $22 $FD11 performs the requested actions described and provide the response data in the positive response message within P2CAN_SERVER seconds after receiving the request.

4.2.3.6 Negative responses

Service $22 $FD11 supports the following negative response codes:

Negative Response Code $13 - incorrect message length or invalid format is provided if the byte length of the requested message is not correct.

Negative Response Code $31 - request out of range is provided if the data identifier is not supported or if the data identifier is requested in boot.

Copyright 2021 © Knorr-Bremse AG. All rights reserved, including industrial property rights applications.
Knorr-Bremse AG retains any power of disposal, such as for copying and transferring

Y417067: EN, English: 001: DDE1: Working:Li_Qingbiao: 2021/07/05-09:55:29

4.2.3.7 Request Response Format

Service $22 $FD11 supports the request / response format shown in the table below.

4.2.3.8 Request Response Format

Data Byte	Parameter Name	Cvt	Hex Value	Mnemonic
#1d	ReadDataByIdentifier Request Service ID	M	#22h	RDBI
#2-3d	Base Camera Calibration (SPTAC) DataIdentifier	M	#FD11h	BCC

4.2.3.9 Positive response message

Byte	Description Text	Unit	Hex Range Phy. Range	Conversion
#1d	ReadDataByIdentifier Request Service ID	Bit	None	0x62
#2-3d	Base Camera Calibration DataIdentifier	Bit	None	0xFD11
#4-5d	FoeX (yaw)	Bit	-150-150	(signed)HEX (Pixels)
#6-7d	FoeY (horizon)	Bit	-240-120	(signed)HEX (Pixels)
#8-9d	Roll Angle	Bit	-450-450	(signed)((HEX)1/(1<<13)) (Radians)
#10-11d	Camera Height	Bit	50-300	HEX (Centimeters)
#12d	Grabbing Shift	Bit	00-54	HEX
#13d	Status	Bit	None	0x55 = Not Programmed
				0xAA = Programmed

4.2.3.10 Negative response message

Data Byte	Parameter Name	Cvt	Hex Value	Mnemonic
#1d	negativeResponse Service Id	M	#7Fh	NR
#2d	ReadDataByIdentifier Request Service ID	M	#22h	RDBI
#3d	Negative responseCode	cm	#XXh	NRC

Copyright 2021 © Knorr-Bremse AG. All rights reserved, including industrial property rights applications.
Knorr-Bremse AG retains any power of disposal, such as for copying and transferring

Y417067: EN, English: 001: DDE1: Working:Li_Qingbiao: 2021/07/05-09:55:29

5. Dynamic Calibration

For proper camera calibration, Vehicle Calibration data shall be written to the ECU and then DC(Dynamic Calibration) shall be executed.
The Vehicle Calibration is fix parameter that provide the mounting position of the camera inrelation to the vehicle reference points.
The DC process uses the camera to capture large volume of data including lane profile, car drivingattitude. These data are used to calculate the camera height, pitch and yaw angle automatically.

5.1 Sensor installation

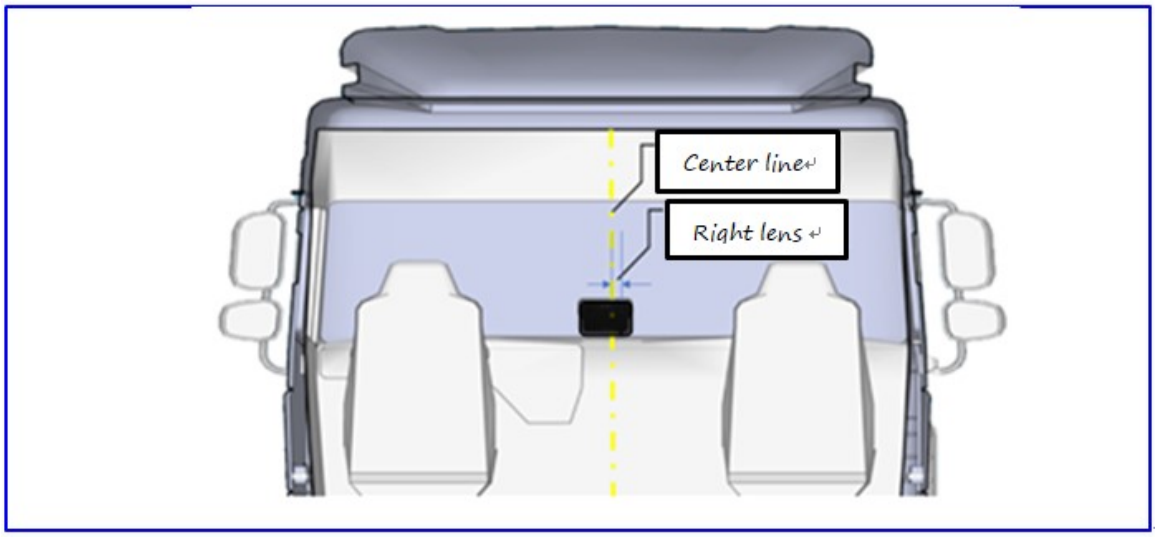

Attach the stereo camera to the front windshield (be careful not to stain 3M glue, leave no Finger prints or dust) while ensuring:

- The right lens of the camera is within 10cm of the center line
- Make 3M glue stick to glass firmly
- To keep Camera horizontal to the vehicle

5.2 DC workflow

Execute Dynamic Calibration (DC) according to the workflow shown in Figure 1.
Before executing the next step make sure that the previous step is successfully finished.If DC fails readjust target pole, power cycle the camera and restart the DC process.
For details see the following sections.

5.3 Calibration workflow details

Copyright 2021 © Knorr-Bremse AG. All rights reserved, including industrial property rights applications.
Knorr-Bremse AG retains any power of disposal, such as for copying and transferring

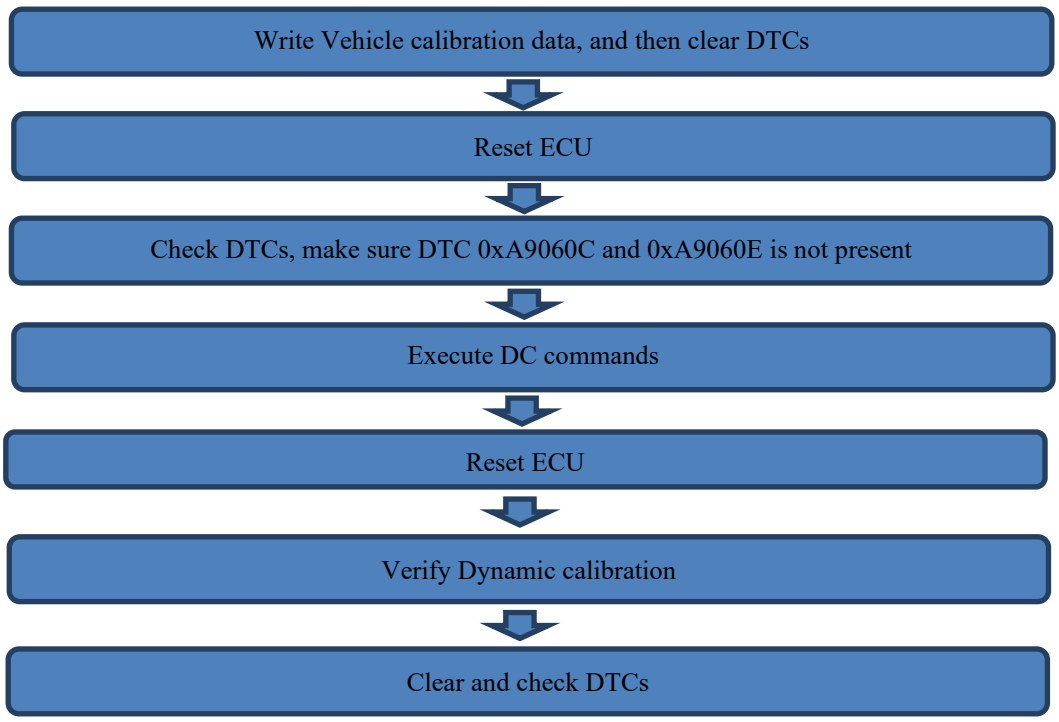

FIGURE 1 – WORKFLOW OF DYNAMIC CALIBRATION

5.3.1 Vehicle Calibration values

Mounting position parameters are required to be written to the camera.

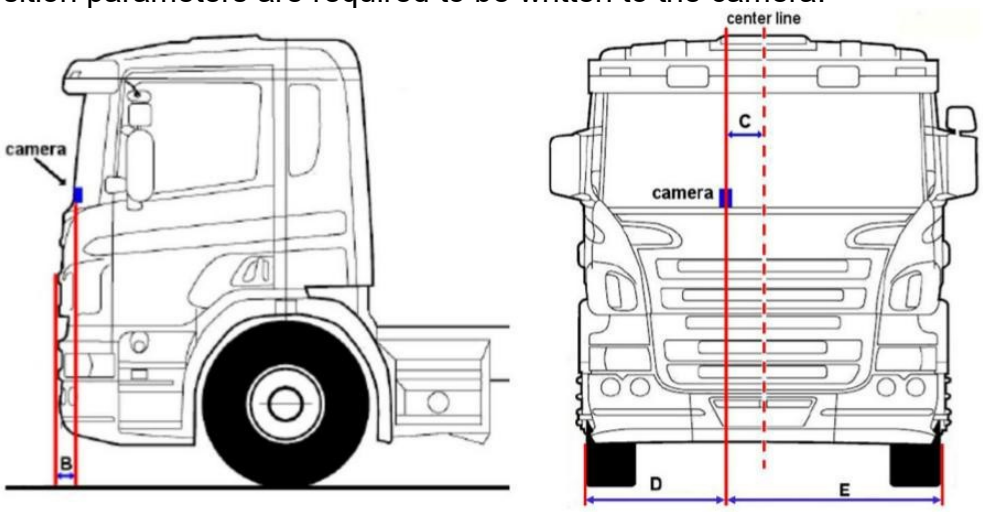

FIGURE 2 - DESCRIPTION OF MOUNTING POSITION PARAMETERS

- E = Left Wheel calibration value for vehicle
- D = Right Wheel calibration value for vehicle
- B = Camera Distance To Head value for vehicle
- C = Camera Lateral value for vehicle referred to the center of the vehicle
- Positive offset is right of vehicle center (looking forward through windshield)

Copyright 2021 © Knorr-Bremse AG. All rights reserved, including industrial property rights applications.
Knorr-Bremse AG retains any power of disposal, such as for copying and transferring

5.4 Process conditions

To avoid sensor recalibration due to failed Dynamic, following details need to be considered:

- Ensure that the windshield in front of the camera isn't covered with anything (tape, dirt,markings, etc...). Windshield heating wires are ok.
- Ensure that there is no condensed water between camera and the inner side of the windshield.
- Ensure that the camera is clipped into the bracket properly.
- Ensure that no one touches the camera lens while assembling.
- Make sure vehicle speed greater than 30km/h, choose a straight lane (radius of curvature largerthan 1000m) which longer than 1km, and lane line are clearly visible.
- Keep vehicle drive along straight line more than 2 minutes or 1km.
- Camera will optimize the Calibration precision when vehicle drive, after drive more than 72h,the LDWS precision can achieve the precision of EOL

5.5 DC UDS commands details

Use the UDS commands below for DC via CAN0 - J1939 vehicle CAN.
Extended session with security access is required for the calibration process.
UDS data bytes are formatted high byte through low byte order (e.g. a 16 bit value of '4321' Hex iswritten in order high byte 43 then low byte 21. A 32 bit value of 87654321 hex is 87 65 43 21).

5.5.1 DC commands

Command	UDS command HEX	Expected Result for success
DC Start Routine	31 01 FE 02	71 01 FE 02
DC Request Routine Results	31 03 FE 02	71 03 FE 02 01 00 00
DC Stop Routine	31 02 FE 02	71 02 FE 02

5.5.2 Write Vehicle calibration values

Use UDS service "WriteDataByIdentifier" for writing vehicle calibration values

Command	UDS command HEX	Expected Result for success
Vehicle calibration	2E FD 10 EE EE DD DD BB BB CC CC nn nn nn nn yy ss	6E FD 10

EE EE	Left Wheel calibration value for vehicle
DD DD	Right Wheel calibration value for vehicle
BB BB	Reference Point X
CC CC	Reference Point Y
nn nn nn nn	ChasisNumber
yy	CountryCode
ss	Status

Copyright 2021 © Knorr-Bremse AG. All rights reserved, including industrial property rights applications.
Knorr-Bremse AG retains any power of disposal, such as for copying and transferring

Y417067: EN, English: 001: DDE1: Working:Li_Qingbiao: 2021/07/05-09:55:29

5.5.3 Reset ECU

Command	UDS command HEX	Expected Result for success
ECUReset	11 01	51 01

5.5.4 DC Verification

Command	UDS command HEX	Expected Result for success
DC Read Base Camera Calibration	22 FD 11	62 FD 11 xx xx xx xx xx xx xx xx xx AA

Read Base Camera Calibration responds with 0xAA in byte 13 for indicating successful DC.

i.Clear DTCs

Clear Error memory.
Read Error memory. Make sure error storage is empty.

Command	UDS command HEX	Expected Result for success
Clear all DTC's	14 FF FF FF	54
Wait 10s for DTC's to be detected		
Read all DTC's	19 02 FF	59 02 89

6Appendix

6.1 UDS commands required for DC

6.1.1 Routine control

The UDS routine control command is used for executing DC.For details about Routine Control service SID 0x31 see [1].

6.1.2 ReadDataByIdentifier

The UDS service ReadDataByIdentifier SID 0x22 is used for verifying DC result.For details about ReadDataByIdentifier SID 0x22 see [1].

6.1.3 WriteDataByIdentifier

Copyright 2021 © Knorr-Bremse AG. All rights reserved, including industrial property rights applications.
Knorr-Bremse AG retains any power of disposal, such as for copying and transferring

Y417067: EN, English: 001: DDE1: Working:Li_Qingbiao: 2021/07/05-09:55:29

The UDS service WriteDataByIdentifier SID 0x2E is used for writing vehicle calibration data.For details about WriteDataByIdentifier SID 0x2E see [1].

6.2 DC Routines and DIDs

6.2.1 RID $ FE02 – DC

6.2.1.1 Description

Service $31 $FE02 allows the diagnostic tool to request the Server to perform a Service CalibrationDC.

6.2.1.2 Security

Service $31 $FE02 requires security access.

6.2.1.3 Application

Service $31 $FE02 is supported by the Application in the extended diagnostic session.

6.2.1.4 Boot

Service $31 $FE02 is not supported by the Boot.

6.2.1.5 Response Timing

Service $31 $FE02 performs the requested actions described and provide the response data in thepositive response message within P2CAN_SERVER seconds after receiving the request.

6.2.1.6 Negative responses

Service $31 $FE02 supports the following negative response codes:

Negative Response Code $7F - service not supported in active session is provided if the requireddiagnostic session is not active.

Negative Response Code $13 - incorrect message length or invalid format is provided if the bytelength of the requested message is not correct.

Negative Response Code $12 - sub function not supported is provided if the requested sub functionis not supported.

Copyright 2021 © Knorr-Bremse AG. All rights reserved, including industrial property rights applications.
Knorr-Bremse AG retains any power of disposal, such as for copying and transferring

Y417067: EN, English: 001: DDE1: Working:Li_Qingbiao: 2021/07/05-09:55:29

Negative Response Code $31 - request out of range is provided if the server does not supported the

requested routine Identifier or the user optional routine Control Option Record contains invalid datafor the requested routine identifier

Negative Response Code $7E – Sub function not supported in active session is provided

if the re-quired diagnostic session is not active.

Negative Response Code $33 - security access denied is provided if the required security level isnot satisfied.

Negative Response Code $24 - request sequence error is provided in the following cases.

a. DC 'requestRoutineResults' sub-function is received without receiving DC 'start Routine' for therequested routineIdentifier.

b. DC 'stopRoutine' sub-function is received without receiving DC 'requestRoutineResults' for therequested routineIdentifier.

Negative Response Code $22 - conditions not correct is provided if the DC conditions are notcorrect.

6.2.1.7 Request Response Format

Service $31 $FE02 supports the request / response format shown in the table below.

6.2.1.8 Request message for Start Routine

Data Byte	Parameter Name	Cvt	Hex Value	Mnemonic
#1d	RoutineControl request Service ID	M	#31h	RC
#2d	Sub-function = [Start Routine]	M	#01h	LEV_ RCTP _
#3d #4d	routineIdentifier [] = [Service Calibration DC #1 Service Calibration DC #2]	M M	#FE #02	RI_ B1 B2

Copyright 2021 © Knorr-Bremse AG. All rights reserved, including industrial property rights applications.
Knorr-Bremse AG retains any power of disposal, such as for copying and transferring

Y417067: EN, English: 001: DDE1: Working:Li_Qingbiao: 2021/07/05-09:55:29

6.2.1.9 Positive response message for start routine

Data Byte	Parameter Name	Cvt	Hex Value	Mnemonic
#1d	RoutineControl request Service ID	M	#71h	RCPR
#2d	Start Routine	M	#01h	RCTP_
#3d #4d	routineIdentifier [] = [Service Calibration DC #1 Service Calibration DC #2]	M M	#FE #02	RI_ B1 B2

6.2.1.10 Request message for Stop Routine

Data Byte	Parameter Name	Cvt	Hex Value	Mnemonic
#1d	RoutineControl request Service ID	M	#31h	RC
#2d	Sub-function = [Stop Routine]	M	#02h	LEV_ RCTP_
#3d #4d	routineIdentifier [] = [Service Calibration DC #1 Service Calibration DC #2]	M M	#FE #02	RI_ B1 B2

6.2.1.11 Positive response message for Stop Routine

Data Byte	Parameter Name	Cvt	Hex Value	Mnemonic
#1d	RoutineControl request Service ID	M	#71h	RCPR
#2d	Stop Routine	M	#02h	RCTP_
#3d #4d	routineIdentifier [] = [Service Calibration DC #1 Service Calibration DC #2]	M M	#FE #02	RI_ B1 B2

6.2.1.12 Request message for Request Routine Results

Data Byte	Parameter Name	Cvt	Hex Value	Mnemonic
#1d	RoutineControl request Service ID	M	#31h	RC
#2d	Sub-function = [Request Routine]	M	#03h	LEV_ RCTP_

Copyright 2021 © Knorr-Bremse AG. All rights reserved, including industrial property rights applications.
Knorr-Bremse AG retains any power of disposal, such as for copying and transferring

Y417067: EN, English: 001: DDE1: Working:Li_Qingbiao: 2021/07/05-09:55:29

#3d #4d	routineIdentifier [] = [Service Calibration DC #1 Service Calibration DC #2]	M M	#FE #02	RI_ B1 B2

6.2.1.13 Positive response message for Request Routine Results

Data Byte	Parameter Name	Cvt	Hex Value	Mnemonic
#1d	RoutineControl request Service ID	M	#71h	RCPR
#2d	Request Routine	M	#03h	LEV_ RCTP _
#3d #4d	routineIdentifier [] = [Service Calibration DC #1 Service Calibration DC #2]	M M	#FE #02	RI_ B1 B2
#5d #6d #7d	routineStatusRecord [] = [Pass - 01/Fail - 02 Reason for Fail : [0x00- NO_DC_ERROR 0x01- UNKOWN_DC_ERROR 0x02- DATA_DIVERGENCE_TOO_BIG 0x03- UNAVAILBALE_CAR_SPEED_DATA 0x04- UNAVAILBALE_IMU_DATA_DC_ERROR 0x05- ROLL_OUT_OF_RANGE 0x06- FOE_OUT_OF_RANGE 0x07- WRITE_TO_NVM_FAILURE 0x08- IPCUART FAILURE 0x09- PARAMS_READ_FAIL 0x0A- CAL_PARAMS_OUT_OF_RANGE 0x1000- DATA_LESS_THAN_ONE_QUARTER 0x1001- DATA_LESS_THAN_TWO_QUARTER 0x1002- DATA_LESS_THAN_THREE_QUARTER 0x1003- DATA_LESS_THAN_FOUR_QUARTER]	U U	#XXh #XXXXh	RSR_ RS_ RS_

Ignore “Reason for Fail” in case of Pass.

0x00-NO_DC_ERROR:

Reports when calibration process is pass.

0x01-UNKOWN_DC_ERROR :

Copyright 2021 © Knorr-Bremse AG. All rights reserved, including industrial property rights applications.
Knorr-Bremse AG retains any power of disposal, such as for copying and transferring

Y417067: EN, English: 001: DDE1: Working:Li_Qingbiao: 2021/07/05-09:55:29

Reported when unknown error encountered while processing.

0x02-DATA_DIVERGENCE_TOO_BIG:

Reported when collected data are too divergent which cannot output a robust calibration result.

0x03-UNAVAILBALE_CAR_SPEED_DATA:

Reported when the CAR SPEED data is not available or valid.

0x04-UNAVAILBALE_IMU_DATA_DC_ERROR:
Camera will Report when the IMU (Inertial Measurement Unit) data is not available or valid. Please check and make sure the vehicle information (vehicle speed) is correct and vehicle can bus had accessed to camera, vehicle stop and wait more than 1minutes, then restart camera and calibrate again.

0x05-ROLL_OUT_OF_RANGE:

Reported when DC has finished calculation, but Roll Angle is out-of-range.

0x06-FOE_OUT_OF_RANGE:

Reported when DC has finished calculation, but Yaw or Horizon is out-of-range.

0x07-WRITE_TO_NVM_FAILURE:

This is reported when DC calibration process is complete without any errors and Calibration writeto MCU NVM fails.

0x08-IPCUART_FAILURE:

This is reported when DC process request messages times out or receives invalid data for therequests from the camera.

0x09-PARAMS_READ_FAIL:

Reported when calibration results read fails.

Copyright 2021 © Knorr-Bremse AG. All rights reserved, including industrial property rights applications.
Knorr-Bremse AG retains any power of disposal, such as for copying and transferring

Y417067: EN, English: 001: DDE1: Working:Li_Qingbiao: 2021/07/05-09:55:29

0x0A-CAL_PARAMS_OUT_OF_RANGE:

This is reported when DC process is complete but MCU internal calibration validation proved to beout of range.

0x1000-DATA_LESS_THAN_ONE_QUARTER:

This is reported when DC process is not complete and the collected data amount is less than onequarter of expected amount.

0x1001-DATA_LESS_THAN_TWO_QUARTER:

This is reported when DC process is not complete and the collected data amount is less than twoquarters of expected amount.

0x1002-COLLECT_DATA_LESS_THAN_THREE_QUARTER:

This is reported when DC process is not complete and the collected data amount is less than threequarters of expected amount.

0x1003-COLLECT_DATA_LESS_THAN_FOUR_QUARTER:

This is reported when DC process is not complete and the collected data amount is less than fourquarters of expected amount.

6.2.1.14 Negative response message

Data Byte	Parameter Name	Cvt	Hex Value	Mnemonic
#1d	negativeResponse Service Id	M	#7Fh	NR
#2d	RoutineControl request Service ID	M	#31h	RC
#3d	responseCode	M	#XXh	RC

6.2.2 DID $ FD10 - Vehicle calibration

6.2.2.1 Description

Write “calibration values for vehicle” to NVM.This value is only valid after ECU reset.

Copyright 2021 © Knorr-Bremse AG. All rights reserved, including industrial property rights applications.
Knorr-Bremse AG retains any power of disposal, such as for copying and transferring

Y417067: EN, English: 001: DDE1: Working:Li_Qingbiao: 2021/07/05-09:55:29

6.2.2.2 Security

Service $22 $FD10 does not require security access.Service $2E $FD10 requires not security access.

6.2.2.3 Application

Service $22 $FD10 is supported by the Application in default, and extended diagnostic sessions.Service $2E $FD10 is supported by the Application in extended diagnostic session.

6.2.2.4 Boot

Service $22 $FD10 is not supported by the Boot.

6.2.2.5 Response Timing

Service $22 $FD10 performs the requested actions described and provide the response data in thepositive response message within P2CAN_SERVER seconds after receiving the request.

6.2.2.6 Negative responses

Service $22 $FD10 supports the following negative response codes:
Negative Response Code $13 - incorrect message length or invalid format is provided if the bytelength of the requested message is not correct.

Negative Response Code $31 - request out of range is provided if the data identifier is not supportedor if the data identifier is requested in boot.

6.2.2.7 Read Request Response Format

Service $22 $FD10 supports the request / response format shown in the table below.

6.2.2.8 Request message

Data Byte	Parameter Name	Cvt	Hex Value	Mnemonic
#1d	ReadDataByIdentifier Request Service ID	M	#22h	RDBI
#2-3d	Vehicle calibration Data Identifier	M	#FD10h	BCC

6.2.2.9 Positive response message

Byte	Description Text	Unit	Hex Range Phy. Range	Conversion
#1d	ReadDataByIdentifier Request Service ID	Bit	None	0x62
#2-3d	Vehicle calibration Data Identifier	Bit	None	0xFD10
#4-5d	Left Wheel calibration value for vehicle	cm	20-100	Unsigned 1 cm / bit

Copyright 2021 © Knorr-Bremse AG. All rights reserved, including industrial property rights applications.
Knorr-Bremse AG retains any power of disposal, such as for copying and transferring

Y417067: EN, English: 001: DDE1: Working:Li_Qingbiao: 2021/07/05-09:55:29

#6-7d	Right Wheel calibration value for vehicle	cm	20-100	Unsigned 1 cm / bit
#8-9d	Distance To Head	cm	0-255	Unsigned 1 cm / bit
#10-11d	Lateral to Center Line	cm	-100-100	Signed 1 cm / bit
#12-15d	ChasisNumber		0-268435455	
#16d	CountryCode			1 = China
#17d	Status			0x55 = Not Programmed 0xAA = Programmed 0xFF = Invalid

6.2.2.10 Negative response message

Data Byte	Parameter Name	Cvt	Hex Value	Mnemonic
#1d	negativeResponse Service Id	M	#7Fh	NR
#2d	ReadDataByIdentifier Request Service ID	M	#22h	RDBI
#3d	Negative responseCode	M	#XXh	NRC

6.2.2.11 Write Request Response Format

Service $2E $FD10 supports the request / response format shown in the table below.

6.2.2.12 Request message

Data Byte	Parameter Name	Cvt	Hex Value	Mnemonic
#1d	ReadDataByIdentifier Request Service ID	M	#2Eh	WRBI
#2-3d	Vehicle calibration Data Identifier	M	#FD10h	BCC
#4-5d	Left Wheel calibration value for vehicle	cm	20-200	NRC
#6-7d	Right Wheel calibration value for vehicle	cm	20-200	Unsigned 1 cm / bit
#8-9d	Distance To Head	cm	0-255	Unsigned 1 cm / bit
#10-11d	Lateral to Center Line	cm	-100-100	Unsigned 1 cm / bit
#12-15d	ChasisNumber		0-268435455	Signed 1 cm / bit
#16d	CountryCode			1 = China
#17d	Status			0x55 = Not Programmed 0xAA = Programmed 0xFF = Invalid

6.2.2.13 Positive response message

Byte	Description Text	Unit	Hex Range Phy. Range	Conversion
#1d	ReadDataByIdentifier Request Service	Bit	None	0x6E

Copyright 2021 © Knorr-Bremse AG. All rights reserved, including industrial property rights applications.
Knorr-Bremse AG retains any power of disposal, such as for copying and transferring

Y417067: EN, English: 001: DDE1: Working:Li_Qingbiao: 2021/07/05-09:55:29

	ID			
#2-3d	Vehicle calibration Data Identifier	Bit	None	0xFD10

6.2.2.14 Negative response message

Data Byte	Parameter Name	Cvt	Hex Value	Mnemonic
#1d	negativeResponse Service Id	M	#7Fh	NR
#2d	ReadDataByIdentifier Request Service ID	M	#2Eh	WRBI
#3d	Negative responseCode	cm	#XXh	NRC

6.2.3 DID $ FD11 - Base Camera Calibration

6.2.3.1 Description

Upon Requesting Service $22 $FD11 ECU returns the Base Camera Calibration.This is a Calibration stored in NVM from DC process.

6.2.3.2 Security

Service $22 $FD11 does not require security access.

6.2.3.3 Application

Service $22 $FD11 is supported by the Application in default, and extended diagnostic sessions.

6.2.3.4 Boot

Service $22 $FD11 is not supported by the Boot.

6.2.3.5 Response Timing

Service $22 $FD11 performs the requested actions described and provide the response data in thepositive response message within P2CAN_SERVER seconds after receiving the request.

6.2.3.6 Negative responses

Service $22 $FD11 supports the following negative response codes:
Negative Response Code $13 - incorrect message length or invalid format is provided if the bytelength of the requested message is not correct.
Negative Response Code $31 - request out of range is provided if the data identifier is not supportedor if the data identifier is requested in boot.

6.2.3.7 Request Response Format

Copyright 2021 © Knorr-Bremse AG. All rights reserved, including industrial property rights applications.
Knorr-Bremse AG retains any power of disposal, such as for copying and transferring

Y417067: EN, English: 001: DDE1: Working:Li_Qingbiao: 2021/07/05-09:55:29

Service $22 $FD11 supports the request / response format shown in the table below.

6.2.3.8 Request Response Format

Data Byte	Parameter Name	Cvt	Hex Value	Mnemonic
#1d	ReadDataByIdentifier Request Service ID	M	#22h	RDBI
#2-3d	Base Camera Calibration Data Identifier	M	#FD11h	BCC

6.2.3.9 Positive response message

Byte	Description Text	Unit	Hex Range Phy. Range	Conversion
#1d	ReadDataByIdentifier Request Service ID	Bit	None	0x62
#2-3d	Base Camera Calibration Data Identifier	Bit	None	0xFD11
#4-5d	FoeX (yaw)	Bit	-150-150	(signed)HEX (Pixels)
#6-7d	FoeY (horizon)	Bit	-240-120	(signed)HEX (Pixels)
#8-9d	Roll Angle	Bit	-450-450	(signed)((HEX)1/(1<<13)) (Radians)
#10-11d	Camera Height	Bit	50-300	HEX (Centimeters)
#12d	Grabbing Shift	Bit	00-54	HEX
#13d	Status	Bit	None	0x55 = Not Programmed0xAA = Programmed

6.2.3.10 Negative response message

Data Byte	Parameter Name	Cvt	Hex Value	Mnemonic
#1d	negativeResponse Service Id	M	#7Fh	NR
#2d	ReadDataByIdentifier Request Service ID	M	#22h	RDBI
#3d	Negative Response Code	cm	#XXh	NRC

Copyright 2021 © Knorr-Bremse AG. All rights reserved, including industrial property rights applications.
Knorr-Bremse AG retains any power of disposal, such as for copying and transferring

Y417067: EN, English: 001: DDE1: Working:Li_Qingbiao: 2021/07/05-09:55:29